PRODUCT SPECIFICATION

A81BHMW

Control System	Pulse width modulation control
Refresh Rate	333Hz
Neutral Position	1520uS
Signal Mode	Digital
Dead band	2 uSec
Operating Voltage	4.8V ~ 8.4V
Operating Temperature	-15C°~ +70C°
Bearing	Three Ball Bearings
Mechanical Angle	No Limit
Size	40*20*37.5mm
Net Weight	83g
Wire	TYU 300mm / 22AWG
Operating Travel	180°±10°
Signal Range	500 to 2500 uSec

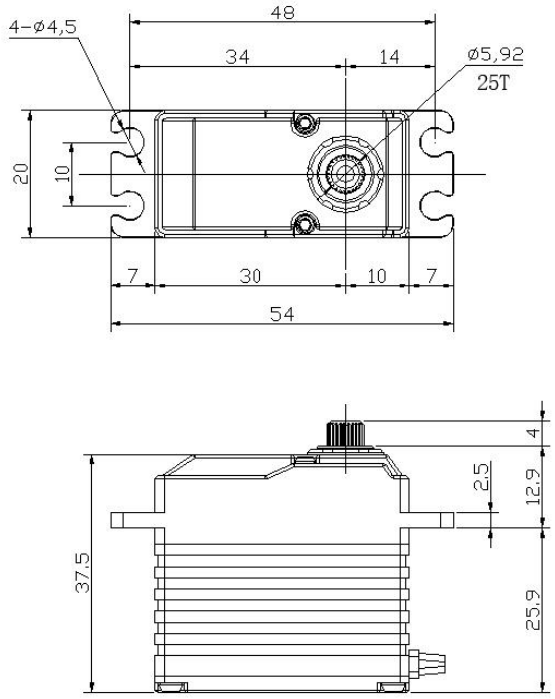

Stall Torque	28 kg-cm (389 oz-in) @ 4.8V 34 kg-cm (472 oz-in) @ 6.0V 39 kg-cm (542 oz-in) @ 7.4V 45 kg-cm (625 oz-in) @ 8.4V	**Unload Current**	280mA @ 4.8V 320mA @ 6.0V 360mA @ 7.4V 400mA @ 8.4V
Operating Speed	0.140sec/ 60° @ 4.8V 0.115sec/60° @ 6.0V 0.100sec/60° @ 7.4V 0.085sec/60° @ 8.4V	**Loading Current**	3600mA @ 4.8V 4000mA @ 6.0V 4300mA @ 7.4V 4600mA @ 8.4V

Direction	☑ CCW	☐ CW		
Waterproof Level	☐IP65	☑IP67		
Angle Sensor	☐Potentiometer	☑Magnet Angle Sensor		
Motor Type	☑Brushless	☐Coreless	☐DC	
Motor Drive	☑FET Drive	☐IC Drive	☐Transistor Drive	
Programmable	☑ Yes	☐ No		
Gear Material	☑Strength Steel	☐Titanium	☐Copper	☐Plastic
Horn Gear Spline	☑25T-φ5.92mm	☐25T-φ4.94mm	☐Other_____	
Case Material	☑AL6061T6	☐AL+Plastic	☐Plastic	
Bearing Material	☑Metal	☐Plastic		
Horn Accessories	☐AL6061T6	☑Plastic		
Wire Color	Negative: ☑ Black Positive: ☑ Black Signal: ☑Grey	☐Brown ☐Red ☐ White	 ☐Orange	